No. STSE-CM4074A
<Cat.No.040915>

SPECIFICATIONS FOR NICHIA CHIP TYPE **FULL COLOR** LED

MODEL : **NECM325CT**

NICHIA CORPORATION

1.SPECIFICATIONS

(1) Absolute Maximum Ratings (Ta=25°C)

Item	Symbol	Absolute Maximum Rating			Unit
		Blue	Green	Red	
Forward Current	I_F	15	15	50	mA
Pulse Forward Current *	I_{FP}	50	50	200	mA
Reverse Voltage	V_R	5			V
Power Dissipation **	P_D	60	60	120	mW
Total Power Dissipation ***	P_{tot}	90			mW
Operating Temperature	T_{opr}	-30 ~ +85			°C
Storage Temperature	T_{stg}	-40 ~ +100			°C
Soldering Temperature	T_{sld}	Reflow Soldering : 240°C for 10sec. Hand Soldering : 300°C for 3sec.			

∗ I_{FP} Conditions : Pulse Width ≦ 10msec. and Duty ≦ 1/10

∗∗ Value for one LED device (Single color).

∗∗∗ Value for total power dissipation when two and more devices are lit simultaneously.

(2) Initial Electrical/Optical Characteristics (Ta=25°C)

Item	Symbol	Condition	Blue			Green			Red			Unit
			Min.	Typ.	Max.	Min.	Typ.	Max.	Min.	Typ.	Max.	
Forward Voltage	V_F	B,G I_F=10[mA] R I_F=20[mA]	-	3.6	4.0	-	3.5	4.0	-	1.9	2.4	V
Reverse Current	I_R	V_R= 5[V]	-	-	50	-	-	50	-	-	50	µA
Luminous Intensity	Iv	B,G I_F=10[mA] R I_F=20[mA]	52	72	144	215	300	600	92	125	260	mcd

∗ Luminous Intensity Measurement allowance is ± 10%.

Color Ranks (B,G I_F=10mA R I_F=20mA, Ta=25°C)

Blue

	Rank W					
x	0.139	0.129	0.113	0.134	0.145	0.152
y	0.035	0.050	0.080	0.105	0.072	0.056

Green

	Rank G0c					
x	0.166	0.136	0.176	0.220	0.237	0.201
y	0.676	0.739	0.750	0.745	0.684	0.686

Red

	Rank R			
x	0.674	0.648	0.677	0.708
y	0.296	0.323	0.323	0.292

∗ Color Coordinates Measurement allowance is ± 0.01.

2.TYPICAL INITIAL OPTICAL/ELECTRICAL CHARACTERISTICS

Please refer to figure's page.

3.OUTLINE DIMENSIONS AND MATERIALS

Please refer to figure's page.

Material as follows ;	Package	:	Heat-Resistant Polymer
	Package Upper Surface Color	:	Black
	Encapsulating Resin	:	Epoxy Resin (Diffused)
	Electrodes	:	Ag Plating Copper Alloy

4.PACKAGING

- The LEDs are packed in cardboard boxes after taping.
  Please refer to figure's page.
  The label on the minimum packing unit shows ; Part Number, Lot Number, Quantity
- In order to protect the LEDs from mechanical shock, we pack them in cardboard boxes for transportation.
- The LEDs may be damaged if the boxes are dropped or receive a strong impact against them, so precautions must be taken to prevent any damage.
- The boxes are not water resistant and therefore must be kept away from water and moisture.
- When the LEDs are transported, we recommend that you use the same packing method as Nichia.

5.LOT NUMBER

The first six digits number shows **lot number**.

The lot number is composed of the following characters;

○□××××

○ - Year (3 for 2003, 4 for 2004)

□ - Month (1 for Jan., 9 for Sep., A for Oct., B for Nov.)

×××× - Nichia's Product Number

6.RELIABILITY

(1) TEST ITEMS AND RESULTS

Test Item	Standard Test Method	Test Conditions	Note	Number of Damaged
Resistance to Soldering Heat (Reflow Soldering)	JEITA ED-4701 300 301	Tsld=240°C, 10sec. (Pre treatment 30°C,70%,168hrs.)	1 time	0/100
Thermal Shock	JEITA ED-4701 300 307	0°C ~ 100°C 15sec. 15sec.	100 cycles	0/100
Temperature Cycle	JEITA ED-4701 100 105	-40°C ~ 25°C ~ 100°C ~ 25°C 30min. 5min. 30min. 5min.	100 cycles	0/100
Moisture Resistance Cyclic	JEITA ED-4701 200 203	25°C ~ 65°C ~ -10°C 90%RH 24hrs./1cycle	10 cycles	0/100
High Temperature Storage	JEITA ED-4701 200 201	Ta=100°C	500hrs.	0/100
Temperature Humidity Storage	JEITA ED-4701 100 103	Ta=60°C, RH=90%	500hrs.	0/100
Low Temperature Storage	JEITA ED-4701 200 202	Ta=-40°C	500hrs.	0/100
Steady State Operating Life		＊ Ta=25°C, B I_F=4mA G I_F=6.5mA R I_F=13mA	500hrs.	0/100
Steady State Operating Life of High Humidity Heat		＊ 60°C, RH=90%, B I_F=2.5mA G I_F=4mA R I_F=8mA	300hrs.	0/100
Steady State Operating Life of Low Temperature		＊ Ta=-30°C, B I_F=4mA G I_F=6.5mA R I_F=13mA	500hrs.	0/100

＊ Value for one LED device (Single color).

(2) CRITERIA FOR JUDGING THE DAMAGE (Value for one LED device (Single color).)

Item	Symbol	Test Conditions	Criteria for Judgement	
			Min.	Max.
Forward Voltage	V_F	B,G I_F=10mA R I_F=20mA	-	U.S.L.*)×1.1
Reverse Current	I_R	B,G,R V_R=5V	-	U.S.L.*)×2.0
Luminous Intensity	I_V	B,G I_F=10mA R I_F=20mA	L.S.L.**)×0.7	-

*) U.S.L. : Upper Standard Level **) L.S.L. : Lower Standard Level

7.CAUTIONS

(1) Moisture Proof Package

· When moisture is absorbed into the SMT package it may vaporize and expand during soldering. There is a possibility that this can cause exfoliation of the contacts and damage to the optical characteristics of the LEDs. For this reason, the moisture proof package is used to keep moisture to a minimum in the package.

· The moisture proof package is made of an aluminum moisture proof bag. A package of a moisture absorbent material (silica gel) is inserted into the aluminum moisture proof bag. The silica gel changes its color from blue to pink as it absorbs moisture.

(2) Storage

· Storage Conditions

Before opening the package :

The LEDs should be kept at 30°C or less and 90%RH or less. The LEDs should be used within a year. When storing the LEDs, moisture proof packaging with absorbent material (silica gel) is recommended.

After opening the package :

The LEDs should be kept at 30°C or less and 70%RH or less. The LEDs should be soldered within 168 hours (7days) after opening the package. If unused LEDs remain, they should be stored in moisture proof packages, such as sealed containers with packages of moisture absorbent material (silica gel). It is also recommended to return the LEDs to the original moisture proof bag and to reseal the moisture proof bag again.

· If the moisture absorbent material (silica gel) has faded away or the LEDs have exceeded the storage time, baking treatment should be performed using the following conditions.

Baking treatment : more than 24 hours at 65 ± 5°C

· Nichia LED electrode sections are comprised of a silver plated copper alloy. The silver surface may be affected by environments which contain corrosive gases and so on. Please avoid conditions which may cause the LED to corrode, tarnish or discolor. This corrosion or discoloration may cause difficulty during soldering operations. It is recommended that the User use the LEDs as soon as possible.

· Please avoid rapid transitions in ambient temperature, especially in high humidity environments where condensation can occur.

(3) Heat Generation

· Thermal design of the end product is of paramount importance. Please consider the heat generation of the LED when making the system design. The coefficient of temperature increase per input electric power is affected by the thermal resistance of the circuit board and density of LED placement on the board, as well as other components. It is necessary to avoid intense heat generation and operate within the maximum ratings given in this specification.

· During operation of the LEDs the total power dissipation of the diode elements (red, green, and blue) within the LEDs must not exceed the maximum power dissipation.

· The operating current should be decided after considering the ambient maximum temperature of LEDs.

(4) Soldering Conditions

· The LEDs can be soldered in place using the reflow soldering method. Nichia cannot make a guarantee on the LEDs after they have been assembled using the dip soldering method.

· Recommended soldering conditions

Reflow Soldering		Hand Soldering	
Pre-heat	120 ~ 150°C	Temperature	300°C Max.
Pre-heat time	120 seconds Max.	Soldering time	3 seconds Max.
Peak temperature	240°C Max.		(one time only)
Soldering time	10 seconds Max.		
Condition	refer to Temperature- profile.		

∗ Although the recommended soldering conditions are specified in the above table, reflow or hand soldering at the lowest possible temperature is desirable for the LEDs.

∗ A rapid-rate process is not recommended for cooling the LEDs down from the peak temperature.

[Temperature-profile (Surface of circuit board)]
Use the following conditions shown in the figure.

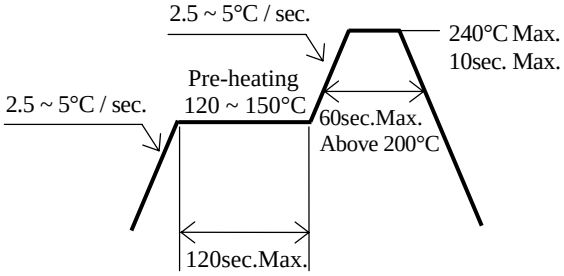

[Recommended soldering pad design]
Use the following conditions shown in the figure.

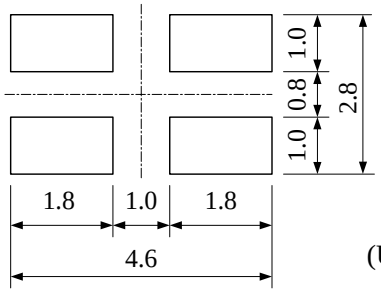

(Unit : mm)

· Repairing should not be done after the LEDs have been soldered. When repairing is unavoidable, a double-head soldering iron should be used. It should be confirmed beforehand whether the characteristics of the LEDs will or will not be damaged by repairing.

· Reflow soldering should not be done more than one time.

· When soldering, do not put stress on the LEDs during heating.

· After soldering, do not warp the circuit board.

(5) Cleaning

· It is recommended that isopropyl alcohol be used as a solvent for cleaning the LEDs. When using other solvents, it should be confirmed beforehand whether the solvents will dissolve the package and the resin or not. Freon solvents should not be used to clean the LEDs because of worldwide regulations.

· Do not clean the LEDs by the ultrasonic. When it is absolutely necessary, the influence of ultrasonic cleaning on the LEDs depends on factors such as ultrasonic power and the assembled condition. Before cleaning, a pre-test should be done to confirm whether any damage to the LEDs will occur.

(6) Static Electricity

· Static electricity or surge voltage damages the Blue/Green LEDs.
It is recommended that a wrist band or an anti-electrostatic glove be used when handling the LEDs.

· All devices, equipments and machinery must be properly grounded.
It is recommended that measures be taken against surge voltage to the equipment that mounts the LEDs.

· When inspecting the final products in which LEDs were assembled, it is recommended to check whether the assembled LEDs are damaged by static electricity or not. It is easy to find static-damaged LEDs by a light-on test or a VF test at a lower current (below 1mA is recommended).

· Damaged LEDs will show some unusual characteristics such as the leak current remarkably increases, the forward voltage becomes lower, or the LEDs do not light at the low current.
Criteria : (V_F > 2.0V at I_F=0.5mA)

(7) Others

· NECM325C complies with RoHS Directive.

· Care must be taken to ensure that the reverse voltage will not exceed the absolute maximum rating when using the LEDs with matrix drive.

· The LED light output is strong enough to injure human eyes. Precautions must be taken to prevent looking directly at the LEDs with unaided eyes for more than a few seconds.

· Flashing lights have been known to cause discomfort in people; you can prevent this by taking precautions during use. Also, people should be cautious when using equipment that has had LEDs incorporated into it.

· The LEDs described in this brochure are intended to be used for ordinary electronic equipment (such as office equipment, communications equipment, measurement instruments and household appliances). Consult Nichia's sales staff in advance for information on the applications in which exceptional quality and reliability are required, particularly when the failure or malfunction of the LEDs may directly jeopardize life or health (such as for airplanes, aerospace, submersible repeaters, nuclear reactor control systems, automobiles, traffic control equipment, life support systems and safety devices).

· User shall not reverse engineer by disassembling or analysis of the LEDs without having prior written consent from Nichia. When defective LEDs are found, the User shall inform Nichia directly before disassembling or analysis.

· The formal specifications must be exchanged and signed by both parties before large volume purchase begins.

· The appearance and specifications of the product may be modified for improvement without notice.

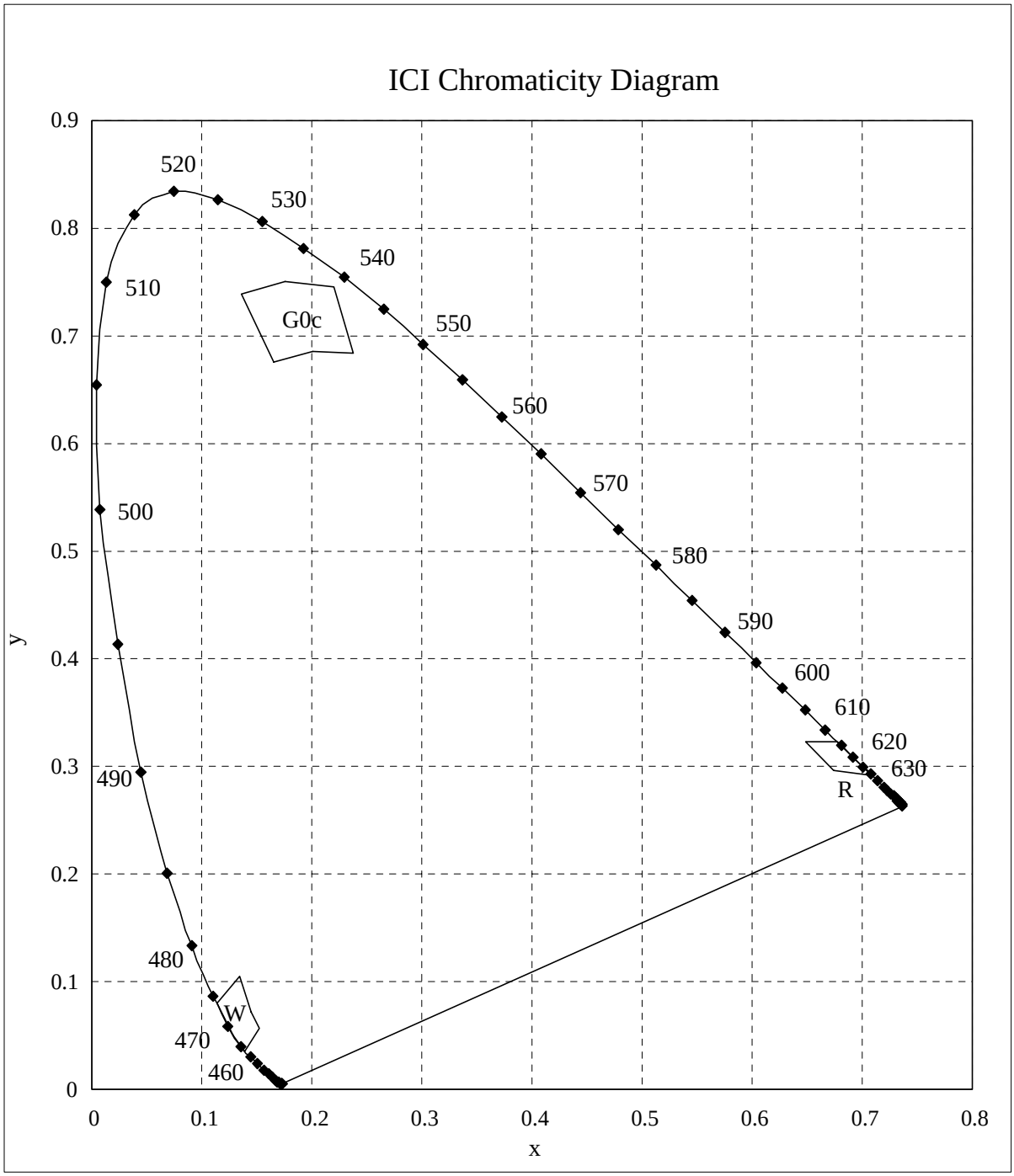

∗ Color Coordinates Measurement allowance is ± 0.01.

■ Forward Voltage vs. Forward Current

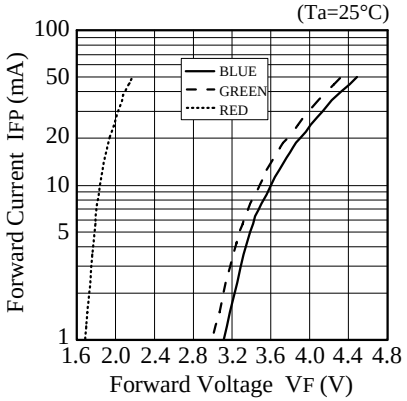

■ Forward Current vs. Relative Luminosity

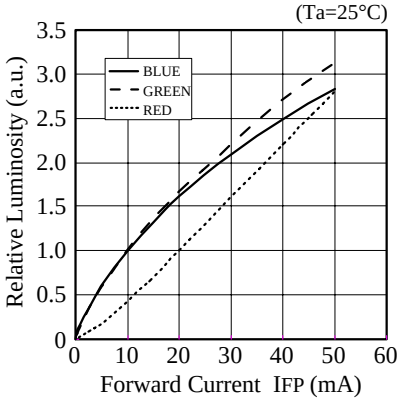

■ Duty Ratio vs. Allowable Forward Current

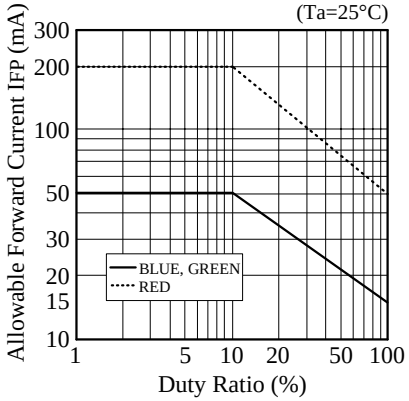

■ Ambient Temperature vs. Forward Voltage

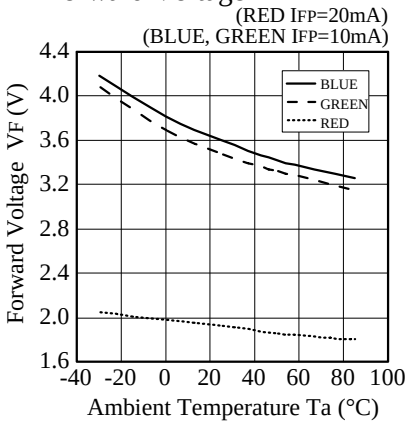

■ Ambient Temperature vs. Relative Luminosity

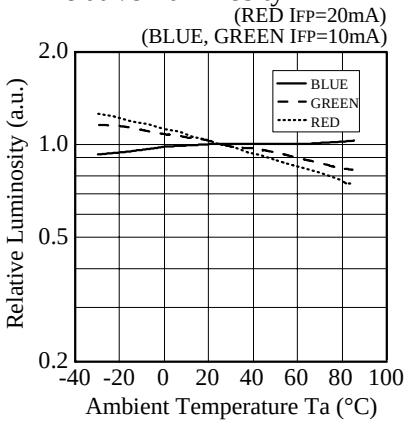

■ Ambient Temperature vs. Power Dissipation ＊

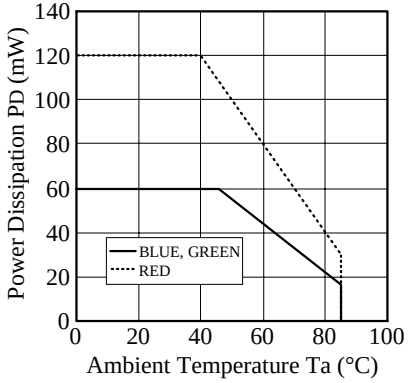

■ Ambient Temperature vs. Power Dissipation ＊＊

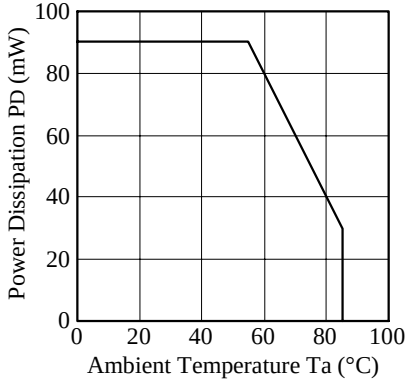

(NOTE) ＊ The value for one device should be within the absolute maximum rating when one or two and more devices are lit (Full color).

＊＊ Total value should be within the absolute maximum rating when two and more devices are lit (Full color).

NICHIA CORPORATION	Model NECM325C	
	Title TYP.CHARACTERISTICS	
	No. 040609428021	

■ Spectrum

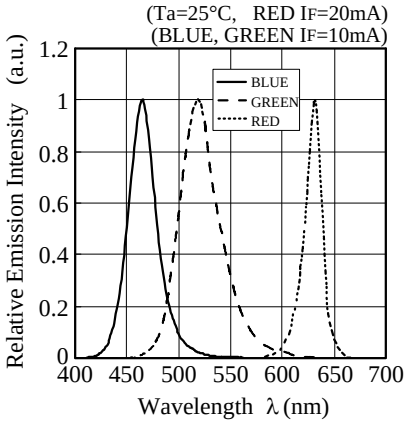

■ Directivity

X-X

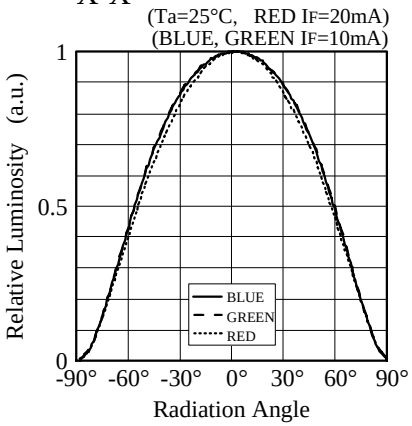

Y-Y

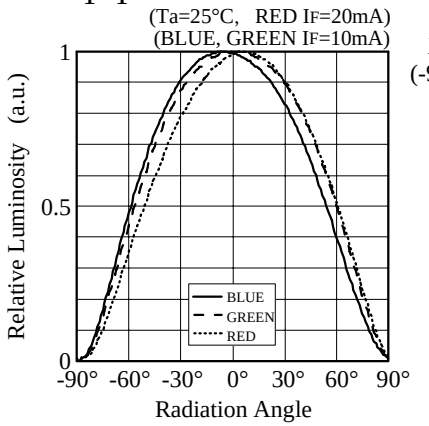

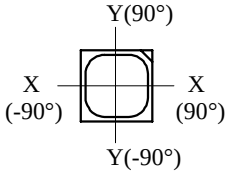

NICHIA CORPORATION	Model NECM325C	
	Title TYP.CHARACTERISTICS	
	No. 070309762501	

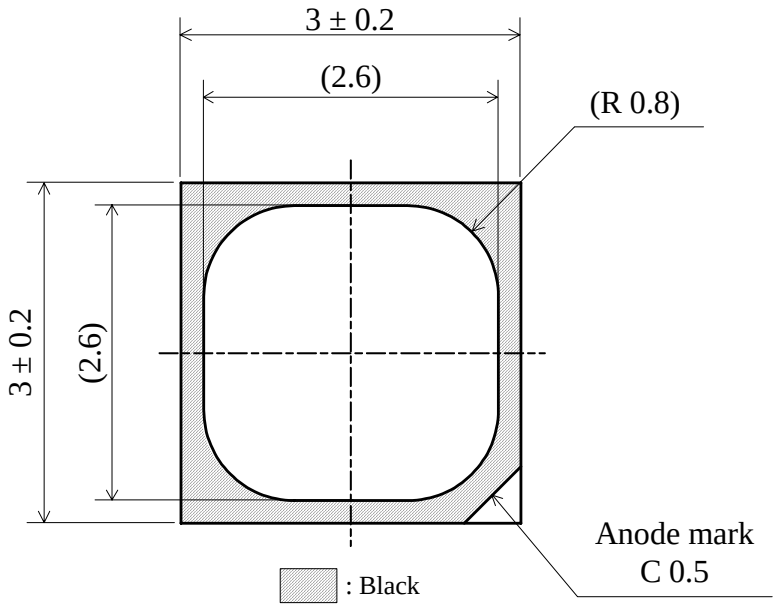

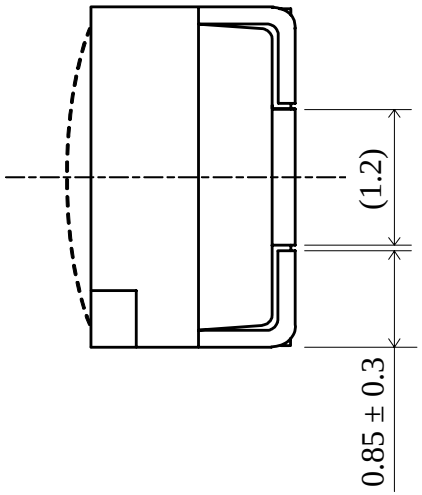

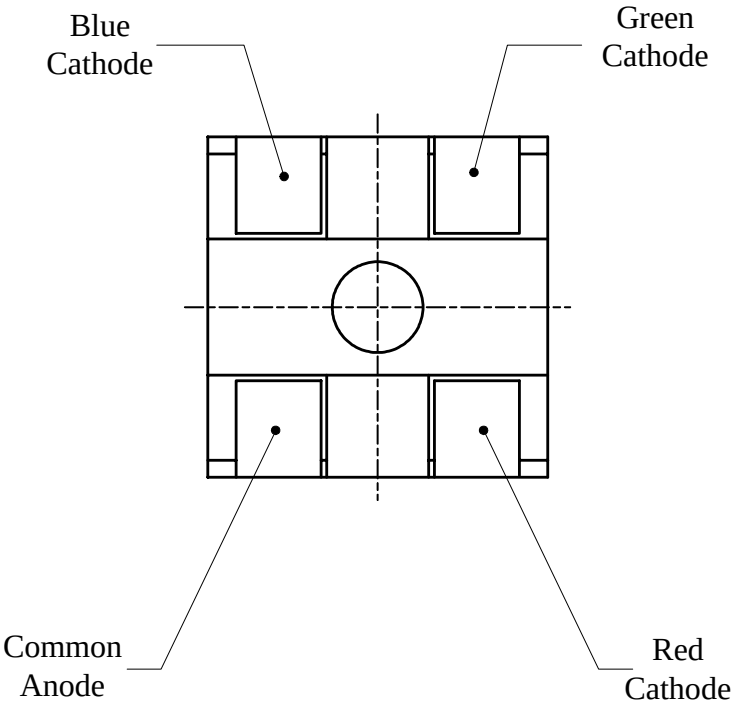

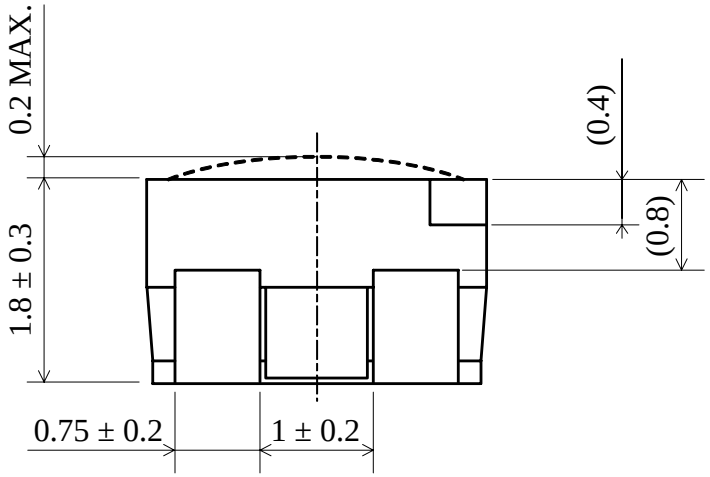

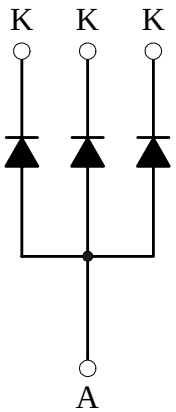

ITEM	MATERIALS
PACKAGE	Heat-Resistant Polymer
PACKAGE UPPER SURFACE COLOR	Black
ENCAPSULATING RESIN	Epoxy Resin (Diffused)
ELECTRODES	Ag Plating Copper Alloy

NICHIA CORPORATION	Model	NECM325C	Unit mm
	Title	OUTLINE DIMENSIONS	15/1 Scale
	No.	030905315561	Allow

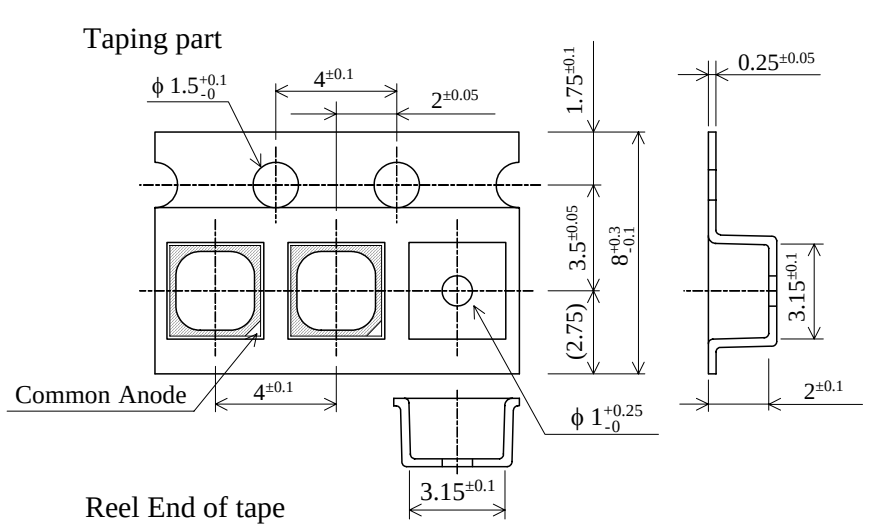

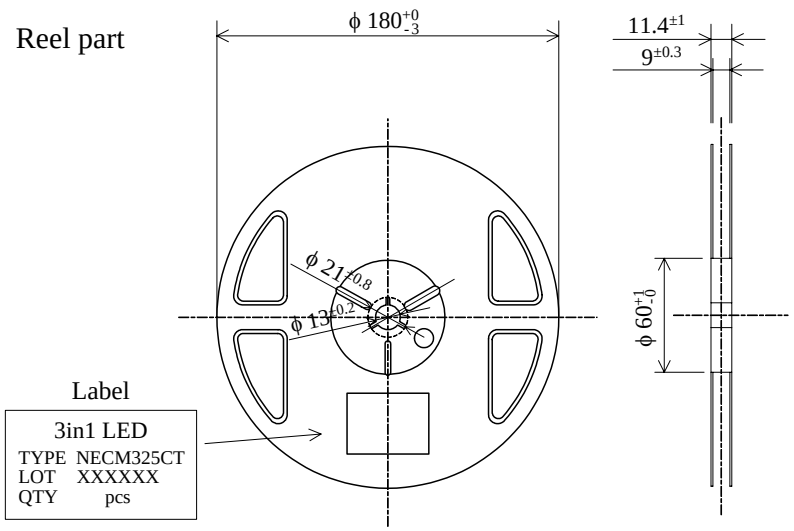

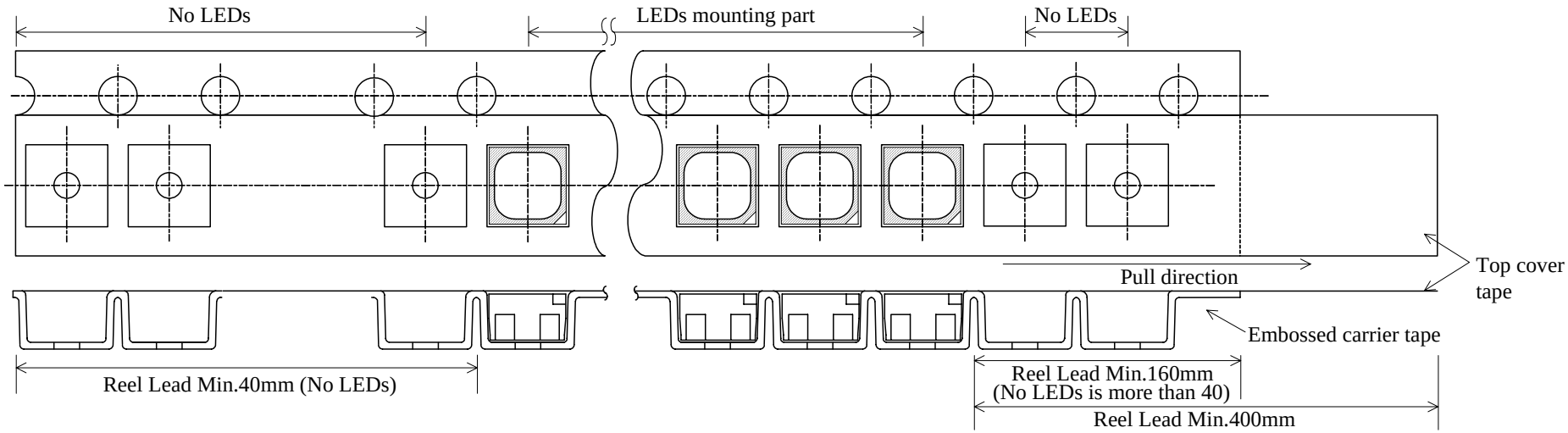

2,000pcs/Reel

Taping is based on the **JIS C 0806** : Packaging of Electronic Components on Continuous Tapes.

NICHIA CORPORATION	Model	NECM325CT	Unit mm
	Title	TAPING DIMENSIONS	Scale
	No.	030918316041	Allow

The reel and moisture absorbent material are put in the moisture proof foil bag and then heat sealed.

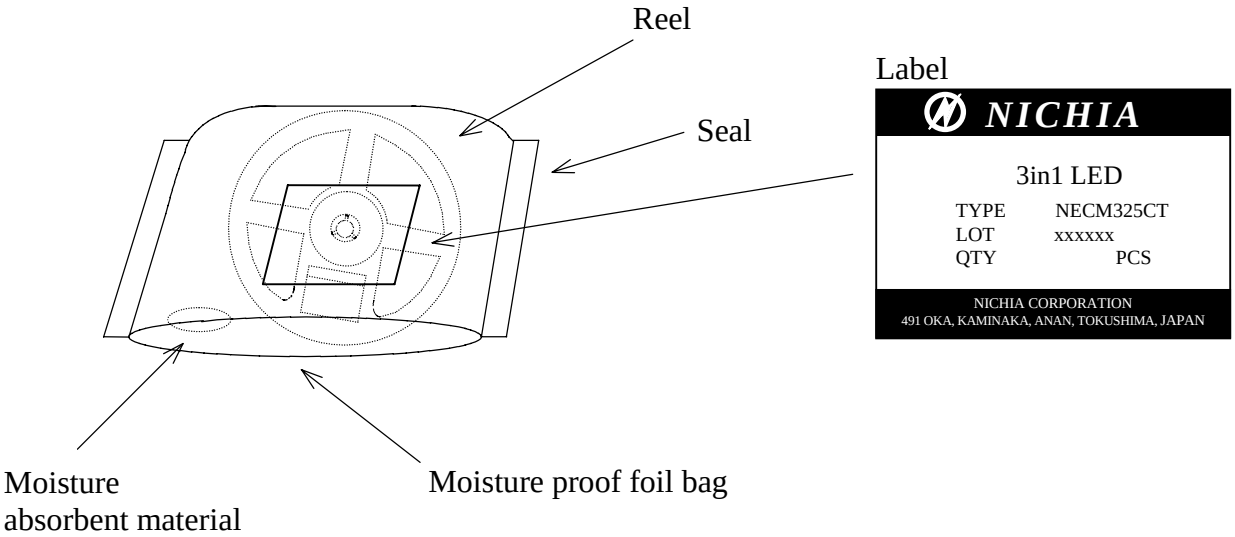

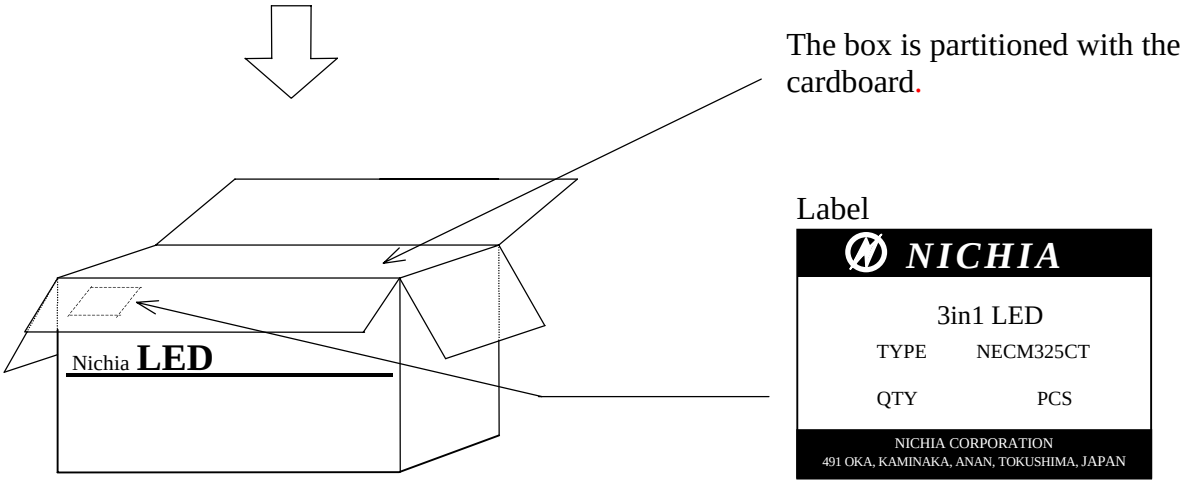

Packing unit

	Reel/bag	Quantity/bag (pcs)
Moisture proof foil bag	1reel	2,000 MAX.

Cardboard box	Dimensions (mm)	Reel/box	Quantity/box (pcs)
Cardboard box S	291×237×120×8t	7reel MAX.	14,000 MAX.
Cardboard box M	259×247×243×5t	15reel MAX.	30,000 MAX.
Cardboard box L	444×262×259×8t	30reel MAX.	60,000 MAX.

NICHIA CORPORATION	Model	NECM325CT
	Title	PACKING
	No.	050712542871